Observations from Several Condition Assessments of Prestressed Concrete Cylinder Pipe used at Energy Generation Facilities

Todd Stong PE[1], Ron R. Jorgenson[2], and Jacob Sauer[3]

[1]Senior Engineer, Golder Associates Inc., 44 Union Boulevard, Suite 300, Lakewood, Colorado 80228; Phone: 303-980-0540; Email: tstong@golder.com
[2]Principal, Golder Associates Inc., Email: rjorgenson@golder.com
[3]Project Engineer, Golder Associates Inc., Email: jsauer@golder.com

ABSTRACT

Golder Associates Inc. has conducted several condition assessments of prestressed concrete cylinder pipe (PCCP) used in the cooling water systems of energy generation facilities. This paper presents observations from these condition assessment projects.

A vital component to the operation of energy generation facilities is the cooling water system. The cooling water system conveys cool water from a river or basin through the plant's condensers to condense steam produced in the process of power generation. The heated water is then returned to the river or basin, or sent through cooling towers to dissipate the gained heat. To work effectively, these systems typically operate with high flows (greater than 200,000 gpm) and low pressures (less than 60 psi) in large diameter pipelines (typically 54 to 120 in). These systems may provide cooling water to one or more units, and redundancy is not typical. Thus, the isolation of these systems for evaluation or repair may require the temporary shutdown of one or several units, resulting in significant costs associated with purchasing replacement power.

Many utilities operating energy generation facilities constructed in the 1970s and 1980s have not included these cooling water systems in their general plant evaluation and maintenance schedule, and these systems have often operated continuously for over 30 years. Due to the increased awareness of plant personnel, and the age of their buried infrastructure, these systems are now being evaluated. Condition assessment of these systems is similar to other pipelines with tasks such as document review, physical evaluation and condition summary, but also requires detailed planning to coincide with planned unit outages, and in some cases requires significant coordination with other facilities to allow for several unit outages at the same time.

Pipeline condition assessments conducted have identified a wide range of conditions for the 30- to 40-year-old PCCP used in cooling water systems, ranging from pristine pipe, to pipe that has technically failed. Factors contributing to the distress observed in the pipelines include the manufacturing practices (particularly the use of class IV prestressing wire), installation practices, nearby stray electric currents, groundwater quality and interaction, and operational stresses. Recommendations from these condition assessments have also varied greatly, from continued evaluation, instituting operational controls, or even complete replacement of distressed portions of the line.

BACKGROUND

Coal-fired energy generation facilities depend on cooling water to condense the steam used to power turbines. Power plants typically have a once-through cooling system or a closed-loop cooling system. In a once-through system, raw water from a lake or river passes through the condensers where the water is used to cool (condense) boiler steam. During this process, the heat from the boiler steam is transferred to the cooling water, and this warmer water is then discharged back into the lake or river. This system relies on the mass of the lake or river to dissipate the heat gained through the condensers. A closed-loop system works in a similar way, but the water is supplied from a cooling tower basin and discharged to cooling towers. This system relies on the cooling towers to reduce water temperature through evaporation.

Because of the large heat transfer requirements, cooling water systems generally process large volumes of water (over 300,000 gallons per minute for a 600MW unit) at low pressures (typically 25-50 pounds per square inch), through large diameter steel and PCCP pipes, generally between 54-inch and 120-inch diameter. The temperature difference between the supply and return lines ranges between 20 and 30 degrees Fahrenheit, and closed loop systems often see supply and return line temperatures of 85 and 115 degrees Fahrenheit respectively. Operational activities on the power plant site often result in significant live loads over these pipelines due to heavy construction equipment, rail lines, and crane operation. Cooling water is often of poor quality with high sediment loads and potentially high chloride and sulfate concentrations which could damage concrete and mortar coatings.

A service interruption in the cooling water system generally results in a required unplanned outage, resulting in significant costs such as purchase of replacement power, repair of the cooling water system, and restart of the boiler and power plant. This plant critical system however, has historically not been included in general plant evaluation and maintenance programs. This may be due to the location of the cooling water system buried outside of the power block, and may be due to the relatively few instances of failure within these systems at power plants over the past 30 to 40 years. Due to some isolated failures, a growing awareness of the age of this infrastructure (often 30+ years old), and increased industry discussion, many power plant operators are beginning to plan for condition assessments of their cooling water systems. We have worked with several energy generation facilities to develop and implement condition assessment of these systems for both once-through and closed-loop facilities. These condition assessments have included a variety of evaluation scopes and unique findings, including those presented in the four following case histories.

CASE HISTORY 1

Site 1 is a coal-fired power plant, with two units generating 1100 MW of power. The closed-loop cooling water system consists of a 120-inch/96-inch diameter PCCP supply line (~1,000ft) and a 120-inch/96-inch diameter PCCP return line (~2000ft).

The piping configuration of the closed-loop cooling water system is illustrated in Figure 1.

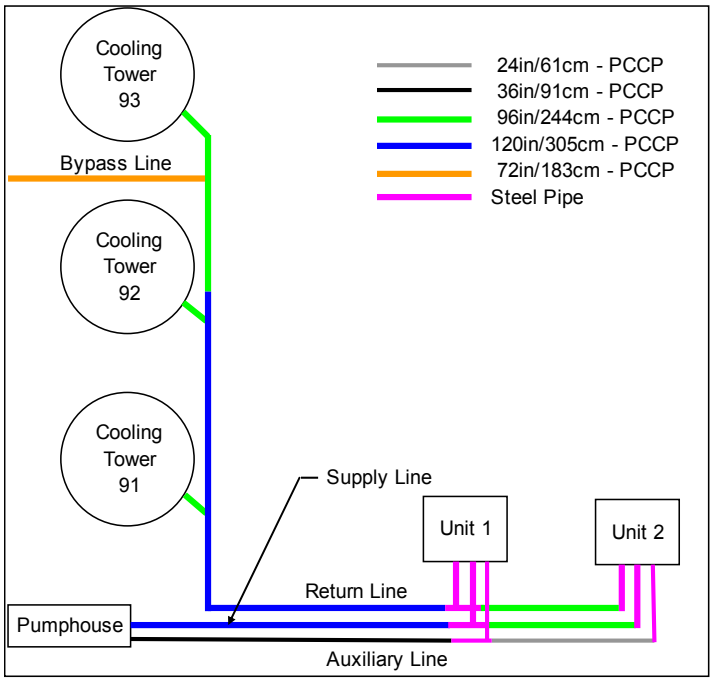

Figure 1 - Site 1 Cooling Water System

The circulating water system is common to both boiler units, and has been in service since 1979. Up to the time of the condition assessment, conducted in 2006, the system had been in service without a dual-unit outage due to cost. General system parameters include:

- Flow rate of 345,000 gallons per minute (gpm);
- Flow velocity of 7 to 10 feet per second (fps);
- Operating pressure of less than 50 pounds per square inch (psi);
- Four to 18 feet of cover and large live loads (rail, heavy construction, crane);
- Water temperature of 85 to 115 degrees Fahrenheit (supply and return);
- PCCP was embedded cylinder pipe (ECP) manufactured by Interpace Corporation utilizing Class IV prestressing wires;
- No cathodic protection system or bonding of PCCP pipes; and
- No historic failures or leaks identified in this pipeline.

We worked with plant personnel to develop and implement a condition assessment plan which included document review, physical evaluation, condition summary, and recommendations for repairs and future evaluations. Because of the significant cost and planning required for a dual-unit outage, and the items identified during the document review (Class IV wire, questionable water quality, stray currents), a robust physical evaluation program was implemented. This included both internal and external visual and sounding, and an electromagnetic survey performed by the Pressure Pipe Inspection Company (PPIC).

The physical evaluation found the supply line to be in good condition with limited visual signs of distress and only three of 53 pipes identified with potential wire breaks (all with less than 50 estimated wire breaks). Portions of the return line however were found to be in poor condition with three pipes having internal and external longitudinal cracking and hollows (Figure 2), and 38 of 102 pipes identified with potential wire breaks with up to 230 wire breaks estimated in a single pipe section. The majority of this distress was identified in a 1,000 foot section of the return line adjacent to the cooling towers.

Figure 2 - Longitudinal cracks on pipe R329 (internal and external)

Observations of the prestressing wires in the distressed pipes identified clean wire breaks with limited signs of corrosion or necking (Figure 3). This brittle type failure suggests that hydrogen embrittlement of the prestressing wires has occurred due to the significant stray currents in the vicinity of the cooling towers and the higher risk of embrittlement associated with the Class IV wire used.

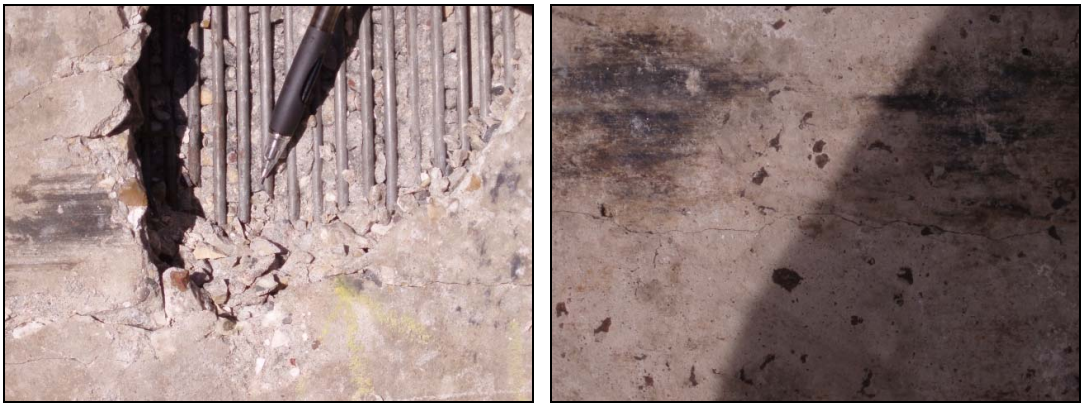

Figure 3- Broken prestressing wires and external longitudinal crack on pipe R332

Recommendations from the physical evaluation included:

- Installation of emergency repairs on three pipe sections consisting of external steel bands (Figure 4);
- Implementation of plant controls to limit pressure surges within the system;
- Development of an emergency repair plan including purchase of emergency repair sections;

- Future physical evaluation on a 5-year interval; and
- Repair or replacement of the 1,000 foot section of the return line.

Figure 4- Steel support band installation

Several repair and replacement options for the distressed section of the return line were evaluate. Replacement of the distressed portion of the return line was chosen over repair due to the significant cost and planning associated with dual-unit outages and the plant personnel desire to have a more complete repair rather than a managed repair. A new pipelines was installed adjacent to the existing line in 2008 and tied-in to the existing cooling towers and return line during a 1-week outage in 2009 (Figure 5). The new line utilized a combination of mortar-lined steel and PCCP pipe and included the installation of a cathodic protection system.

Figure 5 – New Line Installation

CASE HISTORY 2

Site 2 is a coal-fired power plant, with three units generating 1800 MW of power. Units 1 and 2 utilize steel pipe for the cooling water system and Unit 3 utilizes PCCP. For Unit 3, cooling water is pumped from a cooling tower flume through the 120-inch diameter PCCP supply line (~1,400 ft) to the condensers. The heated cooling water is then sent to the cooling water towers through the 120-inch/84-inch diameter PCCP return line (~1,700 ft). The piping configuration of the closed-loop cooling water system is illustrated in Figure 6.

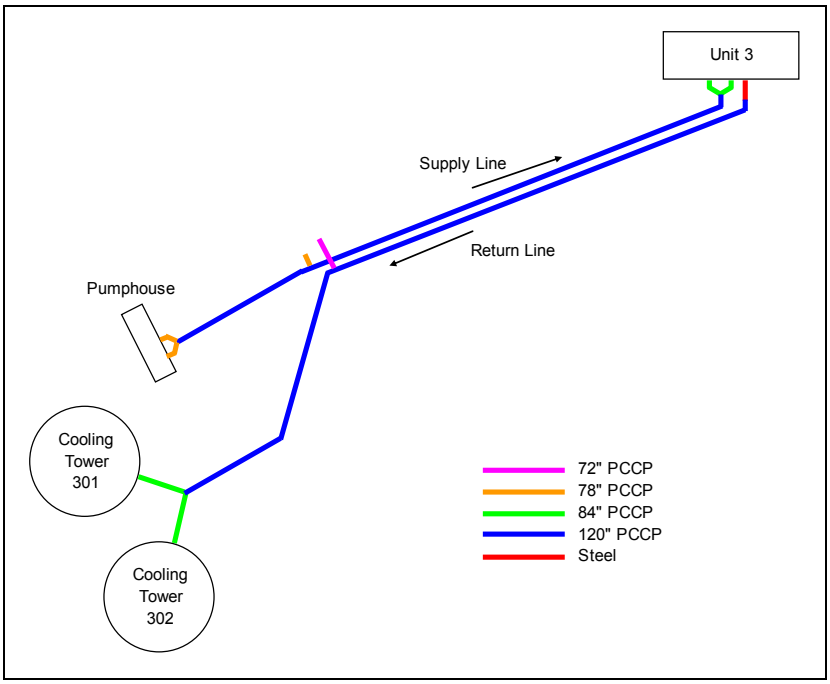

Figure 6 - Site 2 Cooling Water System

The circulating water system has been in service since 1978, with limited previous condition assessment. General system parameters include:

- Flow rate of 332,000 gpm;
- Flow velocity of 7 to 10 fps;
- Operating pressure of 30 to 45 psi;
- Four to 15 feet of cover and large live loads (rail, heavy construction, crane);
- PCCP was ECP manufactured by Interpace Corporation utilizing Class IV prestressing wires;
- Water temperature of 85 to 115 degrees Fahrenheit (supply and return); and
- No cathodic protection system or bonding of PCCP pipes.

In 2007 a likely pressure surge in the system caused a rupture of a section of PCCP (Figure 7).

Figure 7 – Ruptured and repaired PCCP pipe

Prompted by this rupture, plant personnel decided to develop and implement a condition assessment of the cooling water system. Because of the previous rupture, and other items identified during the document review (Class IV wire, questionable water quality, ponded water, pressure surge), a robust physical evaluation program was implemented. This included both internal and external visual and sounding, and an electromagnetic survey performed by PPIC.

The physical evaluation found the supply line to be in generally good condition with limited visual signs of significant distress and only 12 of 77 pipes identified with potential wire breaks (all with less than 30 estimated wire breaks). The return line however was found to be in extremely poor condition with eleven pipes having longitudinal cracks and hollows (Figure 8), and 55 of 86 pipes identified with potential wire breaks. Seven pipes were estimated to have more than 200 estimated wire breaks (max estimate of 320 wire breaks for a single pipe section). The majority of the distress was identified in a 1,000-foot section of the return line.

Figure 8 – Internal and External Longitudinal Cracks and Hollows

Observations of the distressed pipes identified external cracking, delamination of the mortar coating and significant corrosion of the prestressing wires (Figure 9). Further, the soils around the pipe were heterogeneous and ponding water above the pipe appears to have created wet/dry cycles across the pipe. The primary failure mechanism was identified as corrosion of the prestressing wires.

Figure 9 – Corrosion of Prestressing Wires

Recommendations from the physical evaluation included:

- Installation of repair bands on 14 pipe sections consisting of external steel bands (Figure 10);
- Implementation of plant controls to limit pressure surges within the system;
- Development of an emergency repair plan including purchase of emergency repair sections;
- Future physical evaluation on a 5-year interval;
- Regrading of soil over the pipeline to promote drainage and reduce ponded water and infiltration to the PCCP; and
- Repair or replacement of the 1,000 foot distressed section of the return line.

Figure 10 - Steel support band installation

Several repair and replacement options were evaluated, but replacement of the distressed portion of the return line was chosen over repair based on the significant number of pipe sections distressed and the cost benefit comparison of repair versus replacement. The new pipeline was installed adjacent to the existing line in 2007 and tied-in to the existing return line during a planned outage in 2008 (Figure 11). The new line was constructed with PCCP and included the installation of a cathodic protection system.

Figure 11 – New Line Installation

CASE HISTORY 3

Site 3 is a coal-fired power plant with two units generating 1200 MW of power. A combination of PCCP and concrete encased steel is used in the cooling water system for both units. Cooling water is pumped from the Mississippi river through the 120-inch intake and influent lines to the condensers. The heated cooling water is then sent back to the river through the 120-inch effluent and outlet lines. The piping configuration of the once-through cooling water system is illustrated in Figure 12.

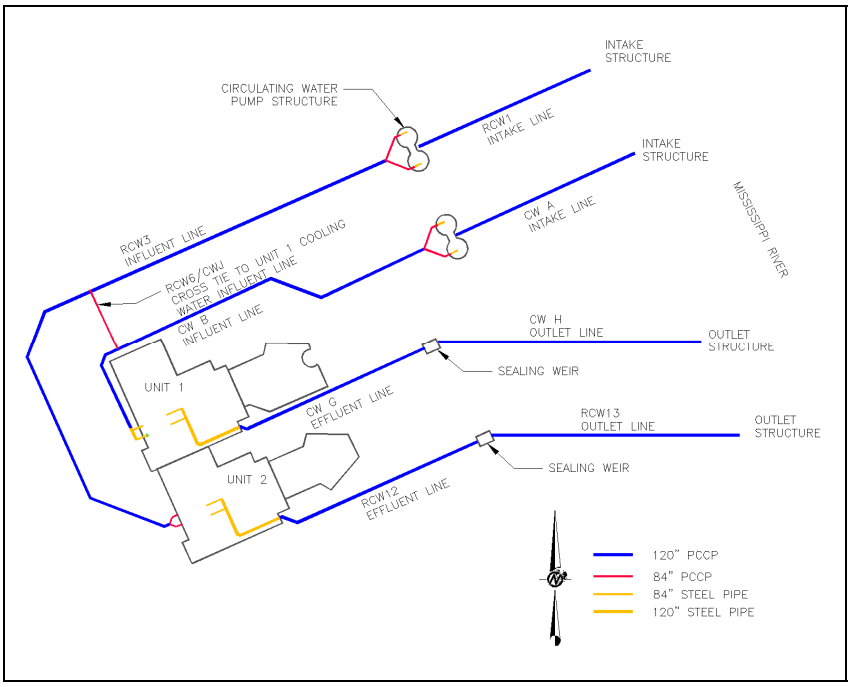

Figure 12 - Site 3 Cooling Water System

The Unit 1 cooling water system has been in service since 1972 and the Unit 2 system has been in service since 1977 with limited previous condition assessment. General system parameters include:

- Flow rate of 332,000 gpm;
- Flow velocity of 10+ fps;
- Operating pressure of 0 to 30 psi;
- Three to 12 feet of cover and large live loads (heavy construction, crane);
- Water temperature of 40 to 105 degrees Fahrenheit (seasonal);
- PCCP was ECP manufactured by Price Brothers Company utilizing Class III prestressing wires;
- No cathodic protection system or bonding of PCCP pipes; and
- No historic failures or leaks identified in this pipeline.

We worked with plant personnel to develop and implement a condition assessment of the Unit 1 and Unit 2 effluent lines. Manned evaluation of the influent lines was not possible due to a leaking cross-tie valve, and evaluation of the intake and outlet lines was not possible due to their hydraulic connection to the river. No significant items were identified during the document review, and a planned outage every 1.5 years

with reasonable access to these lines prompted a basic physical evaluation program, including internal visual and sounding of the effluent lines.

The physical evaluation found no longitudinal cracking or hollows within the effluent lines; suggesting little pipe distress. The Unit 1 effluent line did show significant erosion of the concrete lining (Figure 13) due to the high velocities and sediment load from the River water. The most severe erosion occurred at the end of the line where the pipe transitions to gravity flow and only utilizes a portion of the pipe section increasing the velocity up to 40 fps.

Figure 13 – Erosion at the bottom of the PCCP

Recommendations from the physical evaluation included:

- Implementation of plant controls to limit pressure surges within the system;
- Future physical evaluation on a 5-year interval;
- Physical evaluation of the influent lines (requires dual-unit outage or valve repair); and
- Quantitatively assess the thickness of the concrete lining erosion and implement potential re-lining in the future as required.

CASE HISTORY 4

Site 4 is a coal-fired power plant with two units generating 400 MW of power. Water is pumped from a cooling basin through the 120-inch/72-inch PCCP supply line (~1,000 ft) to the condensers. The heated cooling water is then sent to the cooling towers through the 120-inch/72-inch PCCP return line (~1,000 ft). The piping configuration of the closed-loop cooling water system is illustrated in Figure 14.

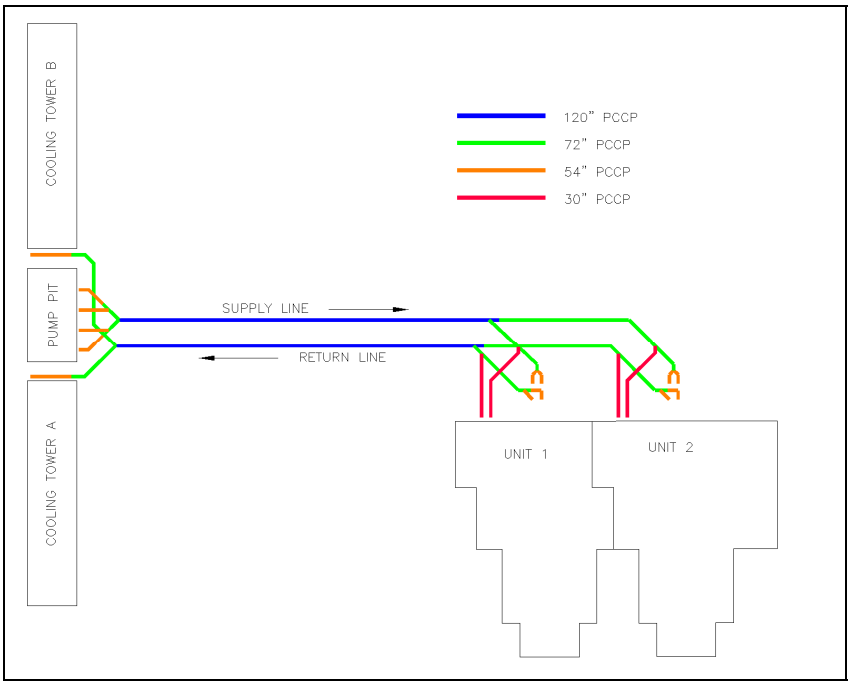

Figure 14 - Site 3 Cooling Water System

The cooling water system is common to both boiler units, and has been in service since 1978 with no previous condition assessment. General system parameters include:

- Flow rate of 180,000 to 240,000 gpm;
- Velocity of 6 to 10 fps;
- Operating pressure of 30 to 35 psi;
- Three to 18 feet of cover and large live loads (heavy construction, crane);
- Water temperature of 80 to 120 degrees Fahrenheit (supply and return);
- PCCP was ECP manufactured by Price Brothers utilizing Class III with the potential use of Class IV prestressing wires;
- No cathodic protection system or bonding of PCCP pipes; and
- No historic failures or leaks identified in this pipeline.

We worked with plant personnel to develop and implement a condition assessment plan. Because of the significant cost and planning required for a dual-unit outage, and the items identified during the document review (potential use of Class IV wire, and adjacent cathodic protection), a robust physical evaluation program was implemented. This included both internal and external visual and sounding (Figure 15), and an electromagnetic survey performed by Pure Technologies (PURE).

Figure 15 – Internal and External Visual and Sounding

The physical evaluation found no longitudinal cracking or hollows within the supply or return lines, and only 5 of 93 pipes were identified with potential wire breaks, with no pipes having more than 5 estimated wire breaks. These observations suggest that no significant distress in the pipe has occurred.

Recommendations from the physical evaluation included:

- Implementation of plant controls to limit pressure surges within the system;
- Future physical evaluation on a 7 to 10-year interval; and
- Regrading to promote positive site drainage away from the PCCP lines.

SUMMARY

Golder Associates Inc. has been involved in the condition assessments of several cooling water systems at coal-fired power plants utilizing PCCP. In general, the vast majority of the PCCP pipe evaluated has been in good condition. Some general observations from various condition assessments are summarized below.

PCCP with Class IV prestressing wires which can be prone to hydrogen embrittlement may be at higher risk at power plant facilities due to several overhead and buried power sources that may provide stray currents to promote embrittlement.

Once-through cooling systems transporting significant sediment loads at high velocities may cause excessive erosion in the concrete lining, which could reduce structural capacity and put the steel cylinder in danger of corrosion attack.

At sites with closed-loop cooling water systems, parallel return and supply lines subject to similar environments experience significantly different amounts of distress. The elevated temperature of the return lines (105-125 ^{o}F) appears to act as a catalyst for corrosion and distress.

Even when significant distress is sustained within the PCCP used in the cooling water systems, a rupture failure is not likely to occur. These systems typically operate with supply pressures less than 50 psi and return line pressures less than 30 psi, which may

be sustained by the PCCP steel cylinder and concrete block-arching without the help of the prestressing wires. Because of these low operating pressures, pipe that has technically failed may still be serviceable until the steel cylinder eventually corrodes and begins leaking. Rupture of these systems is generally a result of operational error such as pump startup/shutdown or a closed valve that causes a surge in the pressure above the capacity of the cylinder and cracked concrete.

The decision of whether to repair or replace PCCP used at cooling water systems is not a straight forward decision. Often, repair of select pipe sections can result in less capital cost than replacement of an entire section of pipeline, but may result in substantially more operational costs associated with a longer outage duration or the continued need for future outages to evaluate and repair other sections as they become distressed. This outage-driven cost evaluation along with plant personnel desire to have a final repair rather than a managed repair has often led to replacement plans rather than repair plans.